100 cm induction top electric triple oven
Professional Series

£ 5,899

PRO105I3EGIT

The triple oven range cooker give great versatility and style to your kitchen. The main oven electric oven has 11 functions, from convection, baking and grilling to warming and displays the oven functions selected, manages time during cooking and gives feedback on real-time temperature. The useful auxiliary oven has six modes. Triple-glass doors minimise heat loss.

The hob has an induction top with five heating zones, including booster feature, pot detection and residual heat indicator for each zone.

Matching range hood and backsplash available.

Colours shown will vary depending on your screen settings and resolution. Contact your dealer for further advice.

Guarda online

Specifications

Features

Worktop	
Size	100 cm
Cooking zones	5
Number of induction zones	5, included 2 flex zones
Worktop type	induction
Worktop design	stainless steel squared
Worktop controls	knobs
Knobs	metal coated
Upstand	yes

Cooking zones	
Induction front left	(210 x 200 mm) 1600 W - 1850 W
Induction back left	(210 x 200 mm) 2100 W - 3000 W
Induction center	(ø 265 mm) 2300 W - 3000 W
Induction front right	(210 x 200 mm) 1600 W - 1850 W
Induction back right	(210 x 200 mm) 2100 W - 3000 W

Oven cavity	
Oven configuration	triple
Oven fuel	electric
Main oven type	electric multifunction
Main oven grill type	electric
Main oven functions	bake / bottom bake / convection / convection bake / convection grill / defrosting / fast preheat / grill / oven light / pizza / upper bake
Main oven volume	69 l
Main oven convection system	single with heating element
Main oven energy rating	A
Auxiliary oven type	electric conventional
Auxiliary oven grill type	electric
Auxiliary oven functions	bake / bottom bake / grill / oven light / turnspit / upper bake
Auxiliary oven volume	54 l

Auxiliary oven energy rating	A
Secondary oven net volume	54 l
Oven controls	knobs / touch digital programmer
Inner oven door	triple
Removable inner glass	yes
Cooling fan	yes
Oven levels	4
Timer	touch digital programmer
Food probe	yes
Oven door closing	anti-slam system
Sliding shelves	2 standard
Wire-shelves	3 chromed
Tray	2 enamelled
Grill trivet for tray	yes
Oven lights	single
Bottom	
Storage compartment	drawer
Legs	stainless steel
Technical specifications	
Voltage and frequency	220/240 V - 50 Hz - 63 A
Absorbed power (W)	14100 W
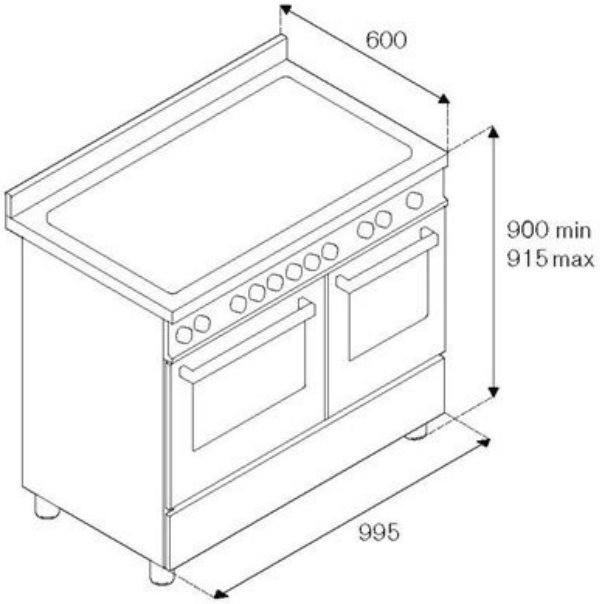
Dimensions