100 cm 6 burner electric triple oven
Professional Series

£ 5,399

PRO106L3EGIT

The triple-oven range cooker is the pinnacle of versality. The main 11-function electric oven features a digital programmer that allows a perfect control of cooking: it displays the oven functions selected, manages time during cooking and gives feedback onreal-time temperature. The useful auxiliary oven, without fan, has six modes. A powerful adjustable grill is provided in the third oven.

Hob has six versatile gas burners in brass including two dual-ring power burners.

Matching range hood and backsplash available.

Colours shown will vary depending on your screen settings and resolution. Contact your dealer for further advice.

Guarda online

Specifications

Features

Worktop	
Size	100 cm
Cooking zones	6
Number of gas zones	6
Worktop type	gas
Worktop design	stainless steel squared
Worktop controls	knobs
Knobs	metal coated
Burners type and caps	brass
Pan supports	cast iron
Continous grating	yes
Flame failure device	yes
Ignition	yes
Upstand	yes
Wok adapter	yes
Simmer ring	yes

Cooking zones	
Dual wok	0.48 kW - 5 kW (2)
Rapid	1.05 kW - 3 kW (1)
Semi-rapid	0.60 kW - 1.75 kW (3)

Oven cavity	
Oven configuration	triple
Oven fuel	electric
Main oven type	electric multifunction
Main oven grill type	electric
Main oven functions	bake / bottom bake / convection / convection bake / convection grill / defrosting / fast preheat / grill / oven light / pizza / upper bake
Main oven volume	69 l
Main oven convection	single with heating element

system	
Main oven energy rating	A
Auxiliary oven type	electric conventional
Auxiliary oven grill type	electric
Auxiliary oven functions	bake / bottom bake / grill / oven light / turnspit / upper bake
Auxiliary oven volume	54 l
Auxiliary oven energy rating	A
Secondary oven net volume	54 l
Third oven grill type	electric
Third oven volume	24 l
Oven controls	knobs / touch digital programmer
Inner oven door	triple
Removable inner glass	yes
Cooling fan	yes
Oven levels	4
Timer	touch digital programmer
Food probe	yes
Oven door closing	anti-slam system
Sliding shelves	2 standard
Wire-shelves	3 chromed
Tray	2 enamelled
Grill trivet for tray	yes
Oven lights	single
Bottom	
Storage compartment	drawer
Toekick panel	yes
Technical specifications	
Voltage and frequency	220/240 V - 50/60 Hz - 28.30 A
Absorbed power (W)	6500 W
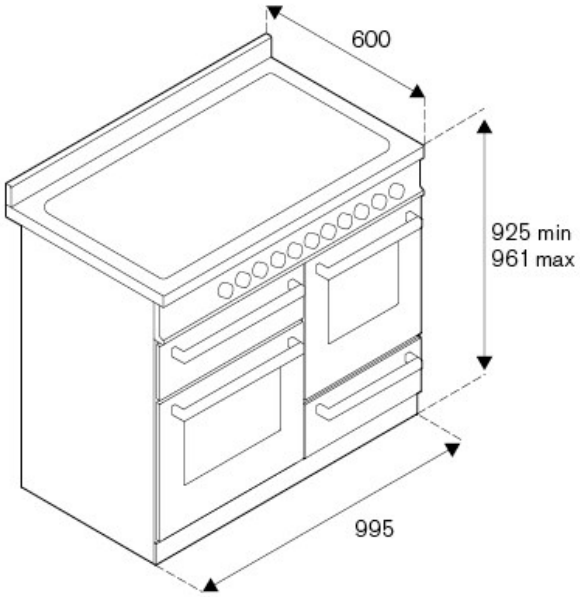
Dimensions