60 cm gas hob with wok

Modern Series

£ 499

P604LMODX

This Bertazzoni Modern Series 60cm gas hob features four aluminium burners and accurate metal control knobs to make cooking simple and precise. A lateral 4kW wok ring offers added versatility. The cast iron pan support is solid and secure for safe use. Finished in stainless steel it is also available in black enamel.

Guarda online

Specifications

Features

Worktop	
Size	60 cm
Number of gas zones	4
Worktop type	gas
Worktop design	stainless steel low edge
Worktop controls	knobs
Knobs	solid metal
Burners type and caps	aluminum
Pan supports	cast iron
Flame failure device	yes
Ignition	yes
Cooking zones	
Wok	4 kW
Semi-rapid	0.60 kW - 1.75 kW
Auxiliary	0.48 kW - 1 kW
Technical specifications	
Voltage and frequency	220/240 V - 50/60 Hz - 1 A
Absorbed power (W)	1 W
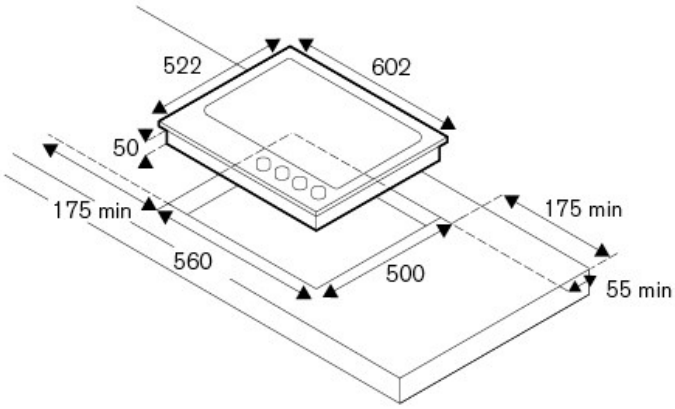
Dimensions