100 cm induction top electric double oven

Master Series

£ 3,199

MAS105I2ENEC

The double-oven range cooker give great versatility and style to your kitchen. The main oven electric oven has 11 functions, from convection, baking and grilling to warming and features a thermometer on control panel. The useful auxiliary oven has four modes. Triple-glass doors minimise heat loss.

The hob has an induction top with five heating zones, including booster feature, pot detection and residual heat indicator for each zone.

Matching range hood and backsplash available.

Colours shown will vary depending on your screen settings and resolution. Contact your dealer for further advice.

Guarda online

Specifications

Features

Worktop	
Size	100 cm
Cooking zones	5
Number of induction zones	5, included 2 flex zones
Worktop type	induction
Worktop design	stainless steel squared
Worktop controls	knobs
Knobs	metal
Upstand	yes
Cooking zones	
Induction front left	(210 x 200 mm) 1600 W - 1850 W
Induction back left	(210 x 200 mm) 1600 W - 1850 W
Induction center	(Ø 265 mm) 2300 W - 3000 W
Induction front right	(210 x 200 mm) 1600 W - 1850 W
Induction back right	(210 x 200 mm) 1600 W - 1850 W
Oven cavity	
Oven configuration	double
Oven fuel	electric
Main oven type	electric multifunction
Main oven grill type	electric
Main oven functions	bake / bottom bake / convection / convection bake / convection grill / defrosting / fast preheat / grill / oven light / pizza / upper bake
Main oven volume	69 l
Main oven convection system	single with heating element
Main oven energy rating	A
Auxiliary oven type	electric conventional
Auxiliary oven grill type	electric
Auxiliary oven functions	bake / bottom bake / grill / oven light / upper bake
Auxiliary oven volume	54 l

Auxiliary oven energy rating	A+
Oven controls	knobs / thermometer
Inner oven door	triple
Removable inner glass	yes
Tray handle	yes
Oven levels	4
Timer	thermometer
Oven door closing	standard
Wire-shelves	3 chromed
Tray	2 enamelled
Oven lights	single
Bottom	
Storage compartment	flap
Legs	stainless steel
Technical specifications	
Voltage and frequency	220/240 V - 50/60 Hz - 50 A
Absorbed power (W)	11500 W
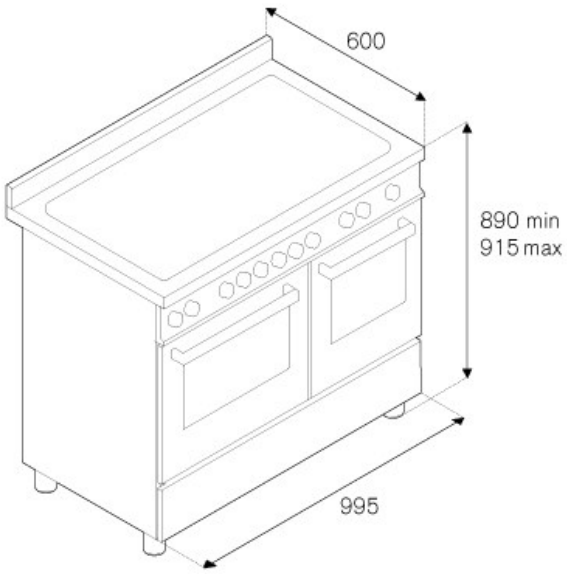
Dimensions