90cm Built-In Bottom Mount, Panel Ready Left hinges

Heritage Series

£ 8,499

REF905BBLPTT

Bertazzoni built-in refrigerators are designed, engineered and made in Italy with the highest grade materials and components. The proprietary 'lift & swing' door hinge system makes them the ideal choice for true flush installation as a single unit or side-by-side.

These built-in refrigerators are built to last forever, employing metal and glass inside and out for better temperature management. The lateral airflow system, with dual compressor and evaporator for refrigerator and freezer, reduces cold air loss when opening doors and allows for category-leading interior depth. The internal configuration is designed for maximum flexibility, with 0,36 m3 of refrigerator volume and 0,10 m3 of FlexMode volume. The FlexMode Refrigerator-Freezer allows to switch the bottom compartment between freezer and refrigerator with one touch. Interior LED lighting on top and sides provide bright interior illumination on all levels with minimal energy consumption. Integrated water filter connected to water line ensures regular production of ice cubes of customizable size.

Using one of the 3 available handle kits in Professional, Master and Heritage Series style, this refrigerator integrates seamlessly with all other Bertazzoni appliances into style-harmonized suites for a true, high-performing kitchen.

Guarda online

Specifications

Features

General features	
Size	90 cm
Cooling system	Total No Frost
User interface	digital display inside
Display functions	bottle cooler, ice maker, ice cube size, super ice, water filter, flex mode, vacation mode, shopping mode, sabbath mode
Lighting	6 LED lights recessed into refrigerator ceiling, 5 side wall flush mounted individual
Open door alarm	yes
Door finishing	panel ready
Refrigerator net capacity	425 L
Refrigerator shelves	3
Refrigerator drawers	2
Bins	3 height-adjustable full-width bins
Freezer net capacity	131 L
Freezer drawers	
Automatic ice maker	yes
Ice production capacity	up to 1,5 kg / 24h

Technical specifications	
Energy class	A+
Voltage and frequency	220-240V, 50/60 Hz

Dimensions

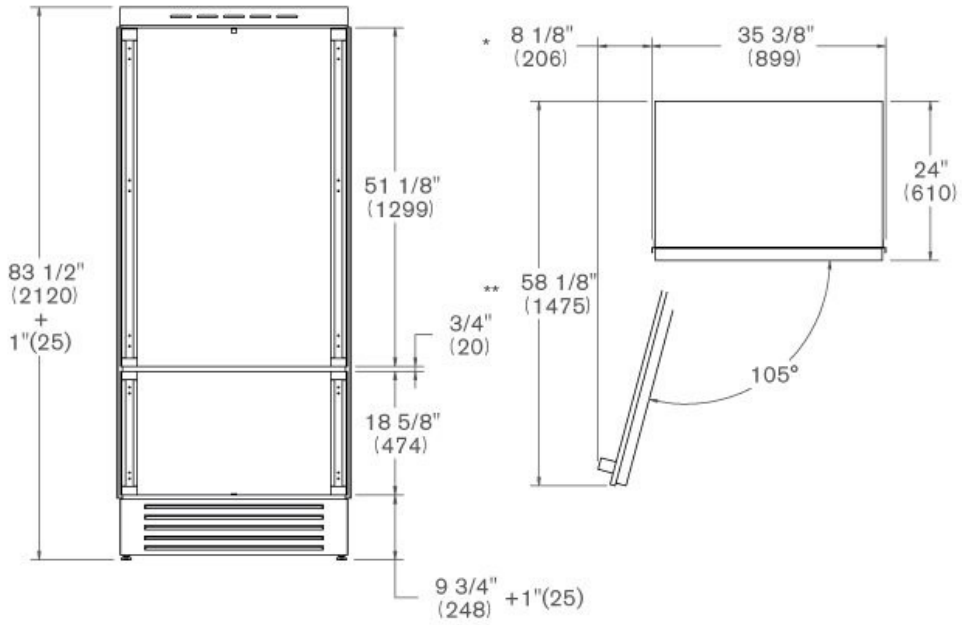
83 1/2"
(2120)
+
1"(25)
51 1/8"
(1299)
3/4"
(20)
18 5/8"
(474)
9 3/4"
(248)
+1"(25)
*
8 1/8"
(206)
35 3/8"
(899)
24"
(610)
**
58 1/8"
(1475)
105°